The INCA Woodworking Machinery Handbook

With useful tips and jigs for everyone

Mark Duginske, Karl Eichhorn

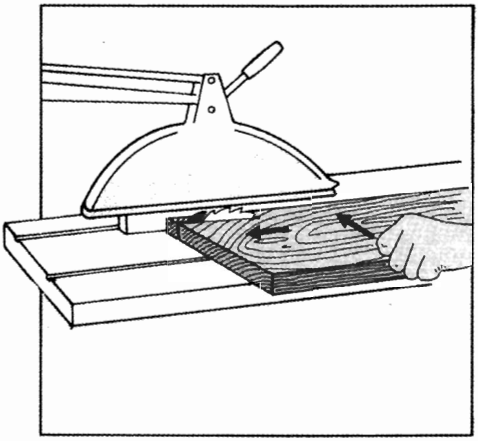

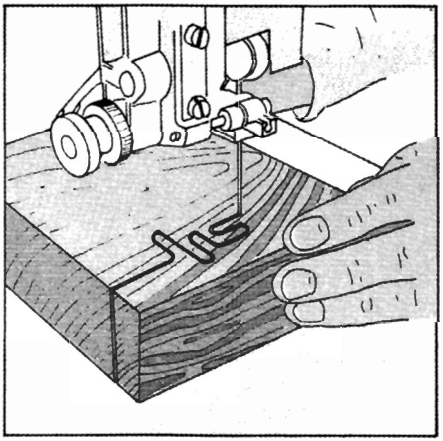

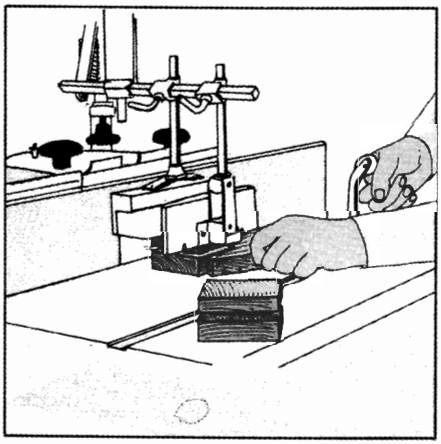

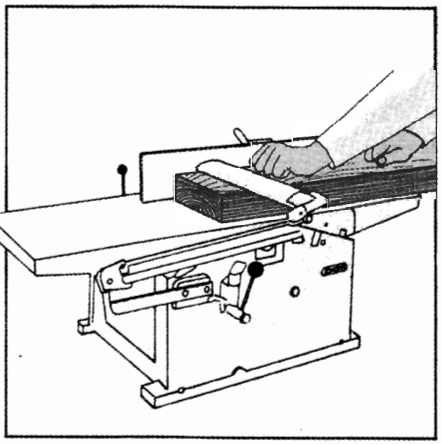

Edited by INCA Ltd, Teufenthal/Switzerland

Using the Jointer / Thickness Planer

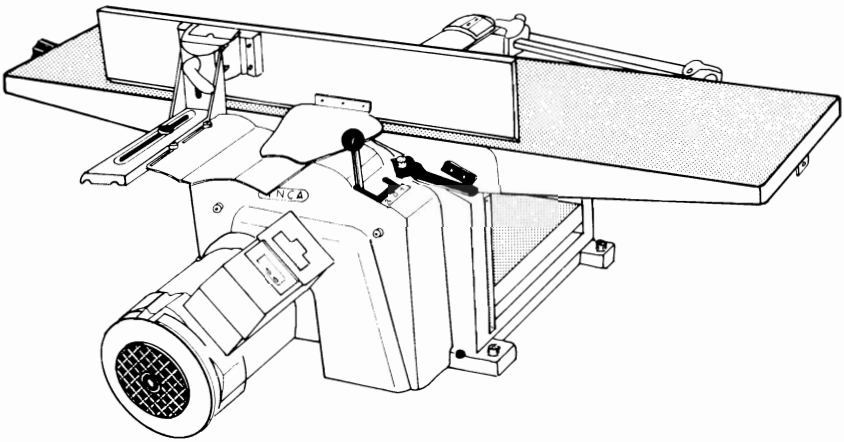

To do high quality joinery and woodworking, you must properly prepare your stock before layout and cutting. Surfaces must be truly flat and edges square and straight.
Lumber, fresh from the mill, usually warps or twists to some extent as it dries. Even if it does not, the surfaces are generally fairly rough and not completely flat because a lumber mill uses a coarse, fast cutting saw.
To remove this roughness and to establish a straight, flat surface, the jointer/planer is used. The top of this machine is the Jointer. It has two tables, infeed and outfeed, one on each side of a revolving cutterhead. The infeed table is adjustable. To make a cut, the infeed table is lowered, and the board is passed over the cutterhead feeding from the infeed table to the outfeed table.
Beneath the cutterhead is another table which is raised and lowered. This is the Thickness Planer section. The flat side of the board is placed on this table and fed into the machine until it is gripped by the powered feed rollers. The rollers evenly drive the board through the Thickness Planer allowing the cutterhead to plane the top side of the board exactly parallel to the bottom side.

The Cutters

Two type of cutters are available. High Speed Steel and Carbide Tipped. High Speed Steel cutters will produce a very fine cut in common hard and soft woods. They will last between 40 and 120 hours in normal use. Carbide Tipped blades are only recommended for cutting plywood, chipboard, plastics, and highly abrasive tropical woods. Because of the high cost of carbide knives, it is often more sensible to buy two sets of High Speed Steel cutters instead of one set of carbide tipped ones. When using carbide knives, you must be very careful. Although carbide will hold an edge for a long time, it is a brittle material and will not withstand rough handling without chipping.

The Cutterhead

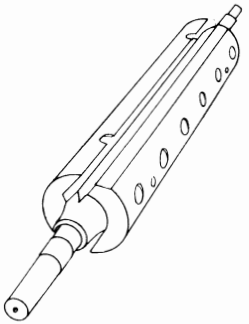

The cutterhead is made of one piece of solid steel with grooves cut into it to hold the cutters and their backing plates. Each cutter has a specially shaped steel backing plate which is held securely against the cutter by a series of locking screws. Beneath each end of each cutter is a special adjusting screw used to raise and lower the cutter. The cutters must be carefully adjusted to get the smoothest possible planed surface.
A new design cutterhead is now available in many parts of the world. This cutterhead uses a special cutter that slides in through the side of the cutterhead. To release this cutter, tap the backing plate behind it and slide the old cutters out, and the slide the new cutters in. Because of its unique design, this cutterhead does not nead or use locking or adjusting screws to hold the blade in place. The blade and backing plate are completely captive, and lock firmly in place as soon as the machine in switched on. And, you can change the cutters in this new cutterhead in a matter of seconds.

Safety notes

Always change both cutters at the same time.
Loosen the locking screws slightly before raising or lower the cutters.
Always check the locking screws for tightness before you use the machine.
Check cutter for cracks – discard cracked cutters, they are dangerous.

Surface or Face Planing

You will always start working a fresh board by surface planing one side to establish a flat and straight reference surface.
The guards should always be used, covering the cutters at all times.
To surface plane a board, you will cut the concave, or cupped, side first. This is to minimize any tendency of the board to «rock» from side to side as it is cut.
Hold the cocave side of the board down against the infeed table with firm controlled, pressure.
Slowly slide the board with your right hand until the cutterhead begins to cut. After about 10" have been cut, press down on the board, over the outfeed table, with your left hand and continue sliding the board until the cut is complete.
Be careful not to feed too fast or to rock the board as you make this cut. Always keep your hands on top of the board and never allow your fingers to come near the cutterhead. Do not press the board down over the cutterhead. Push sticks should be used for small or short pieces.

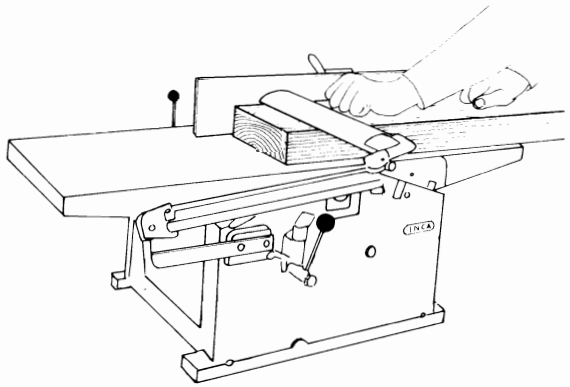

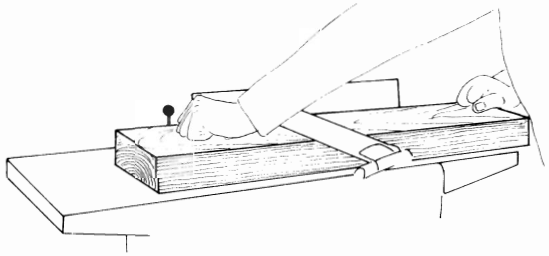

Edge Jointing

With one surface planed flat and straight you will now joint one edge straight and square to the flat surface.
Lower the guard to the table, and pull the end back until the board can just pass between the end of the guard and the fence.
Hold the flat side of the board against the fence and slide the edge of the board over the cutterhead from the infeed table to the outfeed table as in surface planing.

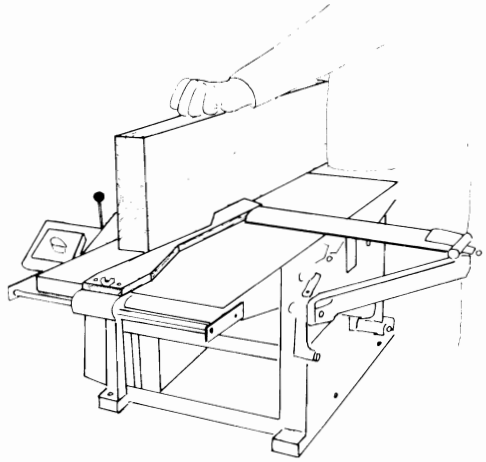

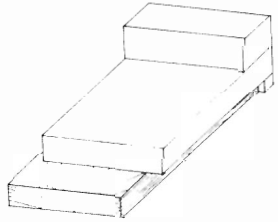

Table and Cutter Position For Jointing and Planing

a. Board being cut.
b. Outfeed Table.
c. Infeed Table.
d. Cutting Circle of the Rotating Cutters.
e. Depth of Cut.

Boards should always be jointed or planed with the grain (as shown) for the smoothest surface finish.
The jointer consists of an infeed table «c», and an outfeed table «b». The outfeed table surface and the top of the cutting circle «d» must be at the same point.
The infeed table is set slightly lower than the top of the cutting circle. As the board is fed across the cutter, the bottom surface is cut off and the freshly cut surface is exactly supported by the outfeed table.

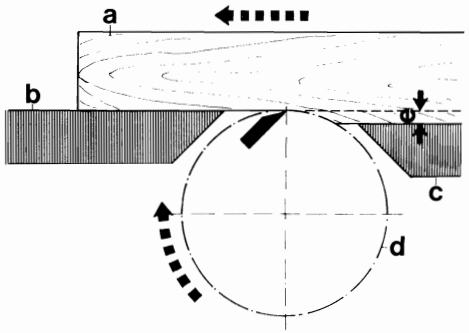

Incorrect Knife and Table Settings

The outfeed table is too high or the cutters are too low.
In this case the end of the board will hit the edge of the outfeed table. If you raise the board slightly to overcome this, you will only cut a taper. Solution: Reset knives or outfeed table.
The outfeed table is too low or the cutters are too high.
The symptom of this condition is a «snipe» at the end of the board as shown below. Solution: Reset the knives or the outfeed table.

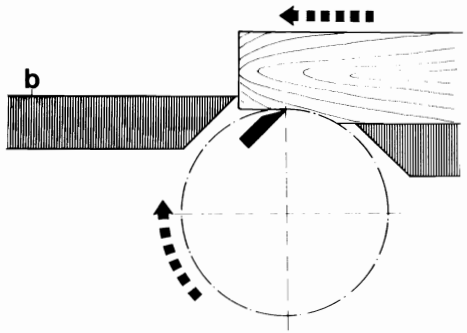

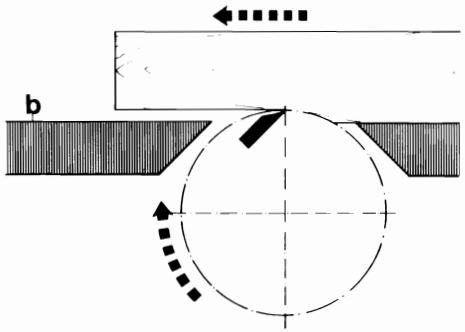

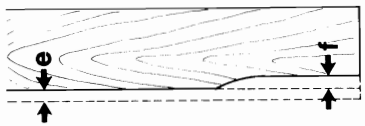

The Jointer Fence

The angle of the fence should be checked and adjusted by using a high quality try square, or a block of dry hardwood cut to the required angle.
You should move the fence to different positions over the cutterhead from time to time to help insure even cutter wear.
The rear cutter guard should always completely cover the cutterhead beneath it.

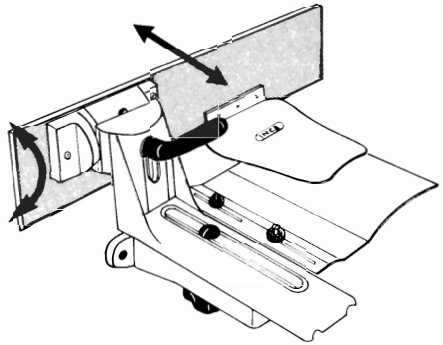

The SUVA type Jointer Guard

This type of guard can be raised, lowered, and positioned in or out for jointing or surface planing. Always use the guard positioned as close to the work, fence and cutterhead as possible.

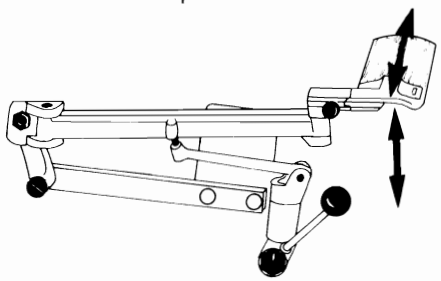

Thickness Planing

Thickness Planing makes one side of your board absolutely parallel to the other and, of course, an even thickness.

First, one side of the board must be absolutely flat. A board can only be accurately thickness planed when one side has been surfaced planed, on the jointer, first.
The flat side of the board is placed against the thicknessing table «f» and fed beneath the limit rod «a». The board must pass easily below this rod. Use the height adjustment crank to raise or lower the table. Then the board passes beneath the anti-kickback fingers «b», and is pulled in by the infeed roller «c» beneath the cutterhead «d» and to the outfeed roller (not shown) which pulls the board the rest of the way through the machine.

Parts of the Thickness Planer
a) Limit Rod
b) Anti-Kickback Fingers
c) Powered Infeed Roller
d) Cutterhead
e) Board Being Planed
f) Thicknessing Table

Cleaning and Polishing
It is a good idea to clean and polish the thicknessing table often with a suitable wax/cleaner (eg INCA Waxilit) especially if you are planing very wet or resinous board.

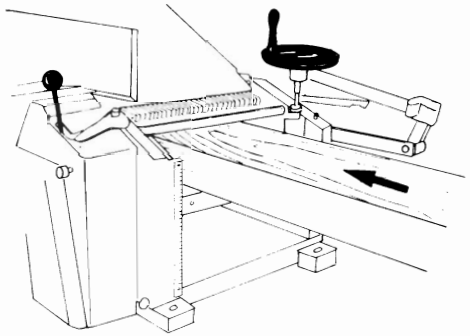

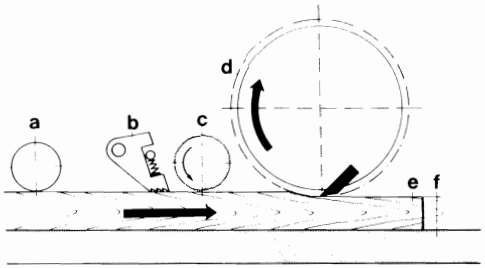

Thickness Planer Feed Speeds

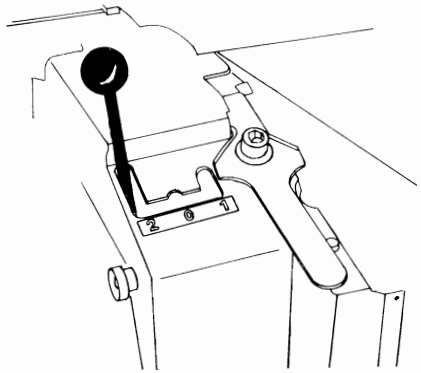

Use the higher speed (2) for softwoods and rough cutting. Use the lower speed (1) for the last finish cuts and for hardwoods.
If the Board Jams While Planing
1. Lower the thicknessing bed. Sometimes one section of a rough board will be much thicker than another. In this case, you must set your depth of cut for the thickest part of the board and work down in a series of passes.
2. Polish and wax the bed.
3. Check the drive belt tension as described in your owners manual or consult with your dealer.

Planing Boards That Are Thinner than 1/8".

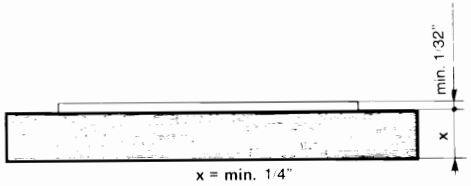

To plane very thin boards you will have to use on auxiliary wooden table on top of the thickness planer table.
Using this auxiliary table feed your boards through at slow speed and use a light cut.
You will be able to plane thinner than 1/16" with most woods. Thin strips can be used to make woven fences as illustrated.

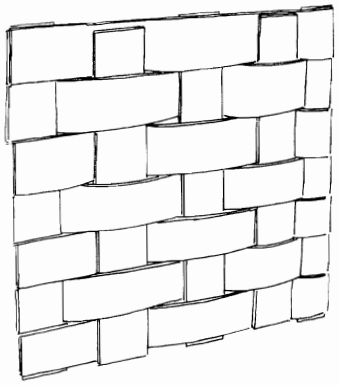

Jointing and Planing Tips

When you begin a new project, select the rough boards you will need and, before jointing and planing, cut them to the approximate length required. Leave 3" to 4" on each end for trimming.
Always joint or plane the shortest boards possible. This will help you do precise, accurate work and will, in the long run, save lumber.

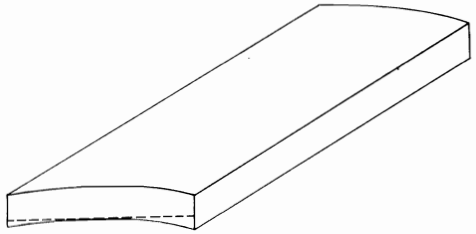

To plane a warped board, always start on the jointer, surface planing one side, the concave side, flat. Then thickness plane the opposite side.

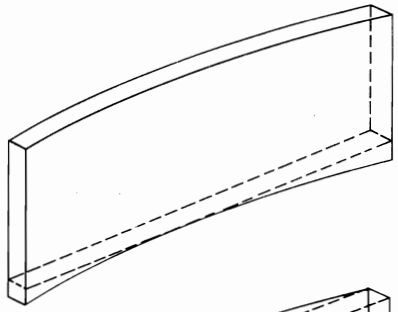

If a board is warped along one edge, surface plane one side first then joint the concave edge straight, holding the flat planed surface against the fence. The other edge can be made parallel to the first by feeding the board through the thickness planer on edge, if it is not too wide, or by using a table saw or bandsaw and its rip fence.

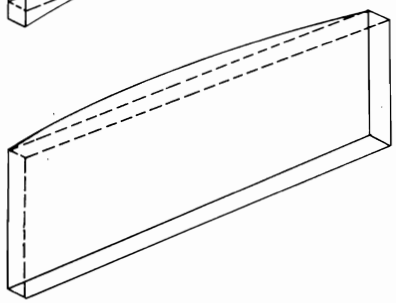

A twisted board is tricky to plane accurately. A little practice is neccessary. First mark the high point on one side. Then, carefully controlling the board by hand, surface plane the high points off until the board is stable and will not rock when cut. Proceed as normally. If at all possible, cut long twisted boards down to shorter lengths.

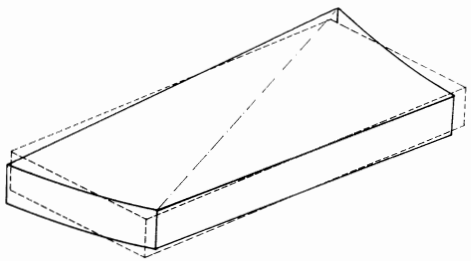

This is a section cut through a warped piece of lumber. To make this piece perfectly square, first surface plane one side. Then hold that side against the fence and joint the adjoining side. Finally, feed the board through the thickness planer with the planed sides placed down against the thicknesser table.

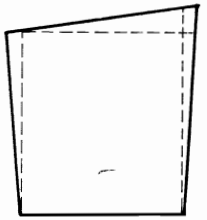

When thickness planing be sure that the workpiece is held flat on the thicknessing table as it is fed in and removed from the machine. For long boards, use of an outfeed roller or stand is wite.